| Dept / Qty | |
|---|---|
| DC | 1 |
| ED | 1 |
| IE | 1 |
| ISO | 1 |
| PD | 1 |
| R&D | 1 |
| SD | 1 |
| QA | 1 |
| QC | 1 |
| QE | 1 |

| REV. | DESCRIPTION | DRAWN | CHECKED | APPROVED |
|---|---|---|---|---|
| A | NEW RELEASE | JLZ 01/18/21' | | |
| | | | | |
| | | | | |
| | | | | |

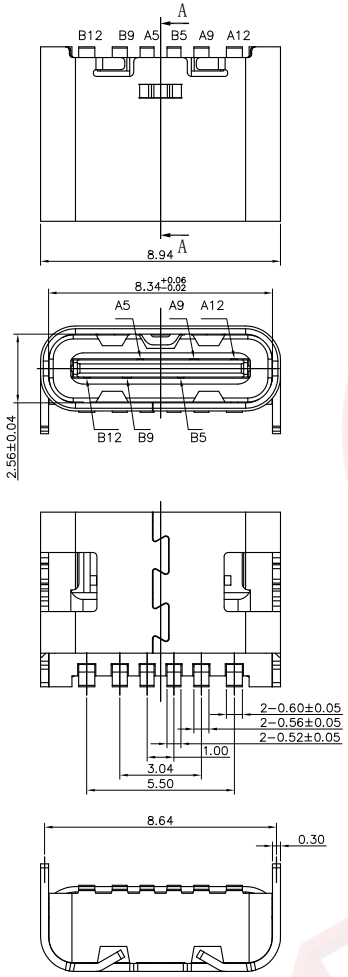


Pin assignments

| | | | |
|---|---|---|---|
| A5 | CC1 | B12 | GND |
| A9 | VBUS | B9 | VBUS |
| A12 | GND | B5 | CC2 |
| Pin | Signal name | Pin | Signal name |

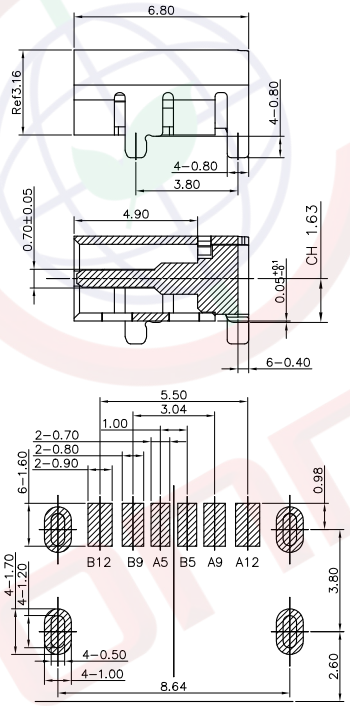


Recommend PCB layout
(Tolerance:±0.05)

NOTE:

1.Material specification:
- 1-1. Housing:High temperature resistant plastic,UL94 V-0.
- 1-2. Contacts:Copper alloy
- 1-3. Shell: Stainless steel

2.Electrical performance:
- 2-1. Current rating:5.0A
  Voltage rating:20.0V
- 2-2. LLCR:
  Vbus & Gnd pins and other pins: 40mΩ/Pin Max.
  Shield: 50mΩ/Max.
  LLCR Max. Change of all pins: 10mΩ.
- 2-3.Insulation resistance: 100MΩ Min
- 2-4.Dielectric withstand voltage,AC 100V for 1 minute.

3.Environmental performance:
- 3-1. Operating temperature: -25°C~+85°C.

4.Ir reflow:
- 4-1. The peak temperature on the board shall
  Be maintained for 10 seconds at 260°C.

5.Product number code:

DS1144−12 − X X X X X X X 0

- Packing Type
  R: Tape On Reel
- Shell Plating
  N: Full Nickel
- Housing color
  B: Black
- Contact Plating
  C: 3u" gold
  8: Gold flash
- Mounting type
  S: SMT type
- Connector type
  F: Female
- No. of contacts
  6: 6pin

(Series Image-Reference Only)

| GENERAL TOLERANCE | | ANGLE TOLERANCE | |
|---|---|---|---|
| X. | ±0.60 | X. | ±5° |
| .X | ±0.38 | .X | ±3° |
| .XX | ±0.25 | .XX | ±2° |

| | | | |
|---|---|---|---|
| DRAWING TYPE | CUSTOMER | | |
| SCALE | 1:1 | SHEET | 1 OF 1 |
| DRAWING NO. | C−DS1144−12−XXXXXX−A | | |

| | | | |
|---|---|---|---|
| PROJECTION | | TITLE | USB Type−C 6P Female Horizontal SMT Type L=6.8mm Centre−H=1.63mm |
| UNITS | mm | | |
| SHEET SIZE | A4 | SERIES | DS1144−12 SERIES |

晨翔电子有限公司
CONNFLY ELECTRONIC CO. LTD

The information provided herein is from CONNFLY Electronic Co., Ltd. and is confidential. Any disclosure to a party other than the recipient is prohibited. The intellectual properties and its rights contained herein, including but not limited to, trademarks, patents, copyrights, trade secrets, and technical know-how, are owned exclusively by CONNFLY or its affiliates. Unauthorized use or modification is strictly prohibited without prior written consent from CONNFLY. All intellectual properties provided herein are for reference purposes only and does not constitute authorization of its use in any format or manner. CONNFLY may enforce its intellectual property rights at its own discretion; failures or delays to exercise such rights does not constitute a waiver of such rights.