Dept / Qty	
DC	1
ED	1
IE	1
ISO	1
PD	1
R&D	1
SD	1
QA	1
QC	1
QE	1

The information provided herein is from CONNFLY Electronic Co., Ltd. and is confidential. Any disclosure to a party other than the recipient is prohibited. The intellectual properties and its rights contained herein, including but not limited to, trademarks, patents, copyrights, is solely owned exclusively by CONNFLY or its affiliates. Unauthorized use or modification is strictly prohibited without prior written consent from CONNFLY. All intellectual properties provided herein are for reference purposes only and does not constitute authorization of its use in any format or manner. CONNFLY may enforce its intellectual property rights at its own discretion; failures or delays to exercise such rights does not constitute a waiver of such rights.

Male

REV.	DESCRIPTION	DRAWN	CHECKED	APPROVED
A	NEW RELEASE	WPY 09/22/26'		

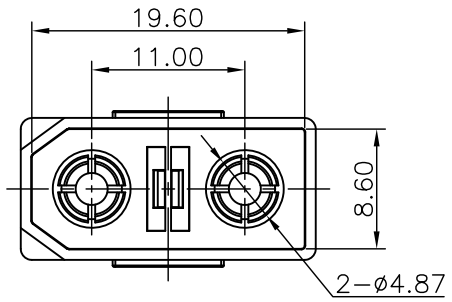

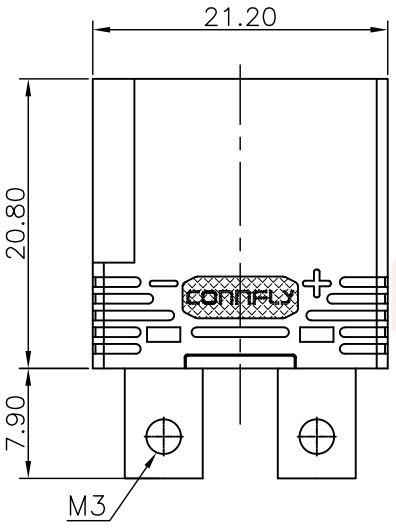

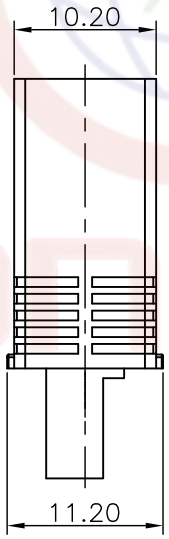

Notes:

1. Rated current: 45A
2. Contact resistance: ≤0.55mΩ
3. Insulation resistance: ≥2000MΩ
4. Dielectric Withstanding Voltage: 1000 VAC/1 min
5. Durability: 100 cycles
6. Operating temperature: -20℃~+120℃
7. Protection level: IP40
8. Salt spray: 24 hours

Materials:

1. Insulator:PA,UL94 V-0
2. Contact:Copper alloy

Product Number Code:

DS1221-14- X X X X X - X

- Plating Level: B:Level B 3A:Level 3A
- Logo Type: X:W/O Logo N/A:W/Logo
- Housing color: Y:Yellow B:Black
- Contact Plating 8:Full gold flash
- Connector type: M:Male F:Female A:Male+Female
- No. of Contacts 2:2Pin

GENERAL TOLERANCE		ANGLE TOLERANCE	
X.	±0.60	X.	±5°
.X	±0.38	.X	±3°
.XX	±0.25	.XX	±2°

DRAWING TYPE	CUSTOMER		
SCALE	1:1	SHEET	1 OF 1
DRAWING NO.	C-DS1221-14-XXXXX-A		

PROJECTION		TITLE	DCXT90U-M Screw Type
UNITS	mm		
SHEET SIZE	A4	SERIES	DS1221-14 SERIES

晨翔电子有限公司

CONNFLY ELECTRONIC CO. LTD