Dept / Qty	
DC	1
ED	1
IE	1
ISO	1
PD	1
R&D	1
SD	1
QA	1
QC	1
QE	1

REV.	DESCRIPTION	DRAWN	CHECKED	APPROVED
A	NEW RELEASE	WPY 10/14/24'		

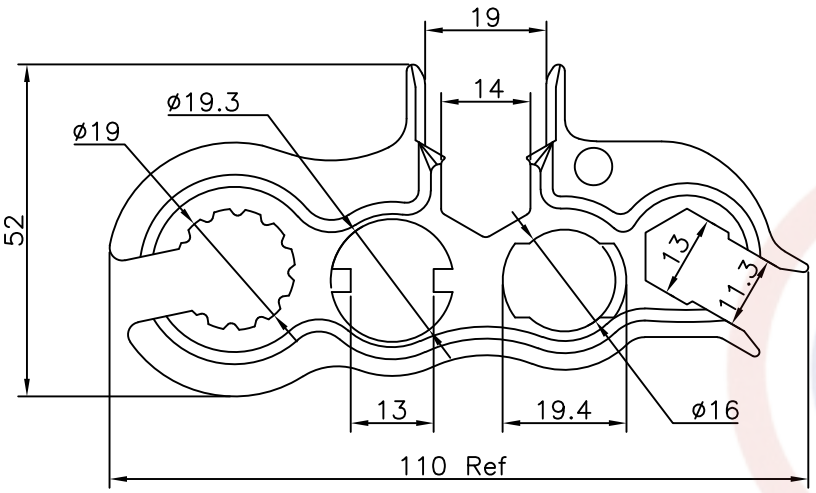

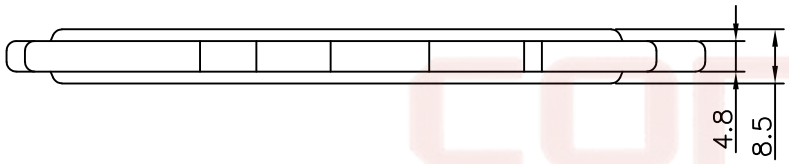

Note:
Specifications.
1. Product Material:PC
2. Features:Effortless and relaxed
3. Usage:Thread tightening,buckle loosening
4. Scope of application:Photovoltaic MC4 connector

Product Number Code:

DS1197-07 - X X

- First X: Housing Material: C:PC
- Second X: Spanner color B:Black



(Series Image-Reference Only)

GENERAL TOLERANCE		ANGLE TOLERANCE	
X.	±0.60	X.	±5°
.X	±0.38	.X	±3°
.XX	±0.25	.XX	±2°

DRAWING TYPE	CUSTOMER		
SCALE	1:1	SHEET	1 OF 1
DRAWING NO.	C-DS1197-07-XX-A		

PROJECTION		TITLE	PV Connector Spanner Tool V
UNITS	mm		
SHEET SIZE	A4	SERIES	DS1197-07 Series

晨翔电子有限公司
CONNFLY ELECTRONIC CO. LTD

The information provided herein is from CONNFLY Electronic Co., Ltd. and is confidential. Any disclosure to a party other than the recipient is prohibited. The intellectual properties and its rights contained herein, including but not limited to, trademarks, patents, copyrights, trade secrets, and technical know-how, are owned exclusively by CONNFLY or its affiliates. Unauthorized use or modification is strictly prohibited without prior written consent from CONNFLY. All intellectual properties provided herein are for reference purposes only and does not constitute authorization of its use in any format or manner. CONNFLY may enforce its intellectual property rights at its own discretion; failures or delays to exercise such rights does not constitute a waiver of such rights.