Dept / Qty	
DC	1
ED	1
IE	1
ISO	1
PD	1
R&D	1
SD	1
QA	1
QC	1
QE	1

The information provided herein is from CONNFLY Electronic Co., Ltd. and is confidential. Any disclosure to a party other than the recipient is prohibited. The intellectual properties and its rights contained herein, including but not limited to, trademarks, patents, copyrights, its code secrets, and technical know-how are owned exclusively by CONNFLY or its affiliates. Unauthorized use, modification is strictly prohibited without prior written consent from CONNFLY. All intellectual properties provided herein are for reference purposes only and does not constitute authorization of its use in any format or manner. CONNFLY may enforce its intellectual property rights at its own discretion; failures or delays to exercise such rights does not constitute a waiver of such rights.

REV.	DESCRIPTION	DRAWN	CHECKED	APPROVED
A	NEW RELEASE	WPY 10/14/24'		
B	Drawing Update	WPY 11/19/26'		

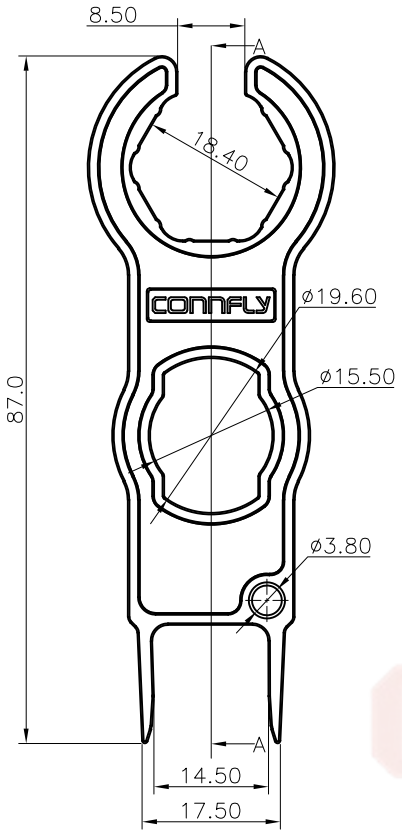

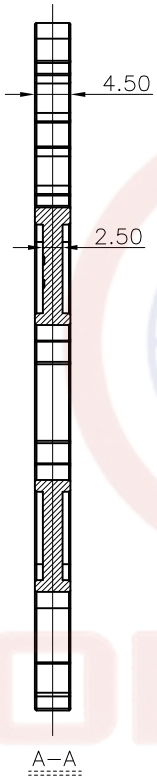

Note:
Specifications.
1. Applicable Connector:1000V Solar Connector
2. Product Material: Zinc alloy
3. Features:Effortless and relaxed
4. Usage:Thread tightening,buckle loosening

Product Number Code:
DS1197-02 - X X

- Applicable Connector
  1:1000V Solar Connector
- Spanner color
  S:Silvery



(Series Image-Reference Only)

GENERAL TOLERANCE		ANGLE TOLERANCE	
X.	±0.60	X.	±5°
.X	±0.38	.X	±3°
.XX	±0.25	.XX	±2°

DRAWING TYPE	CUSTOMER		
SCALE	1:1	SHEET	1 OF 1
DRAWING NO.	C-DS1197-02-XX-B		

PROJECTION		TITLE	PV Connector Spanner Tool I (Zinc alloy)
UNITS	mm		
SHEET SIZE	A4	SERIES	DS1197-02 Series

晨翔电子有限公司
CONNFLY ELECTRONIC CO. LTD