Dept / Qty	
DC	1
ED	1
IE	1
ISO	1
PD	1
R&D	1
SD	1
QA	1
QC	1
QE	1

REV.	DESCRIPTION	DRAWN	CHECKED	APPROVED
A	NEW RELEASE	JLZ 01/18/21'		

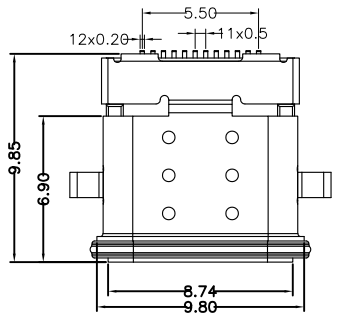

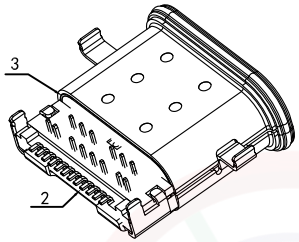

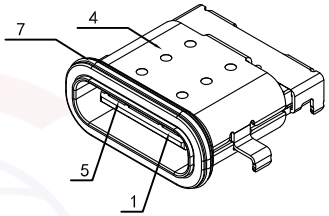

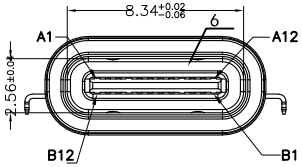

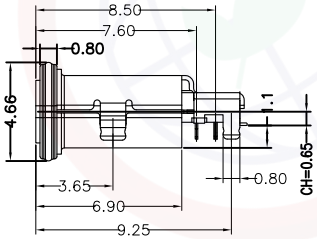

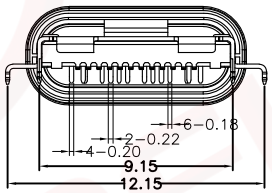

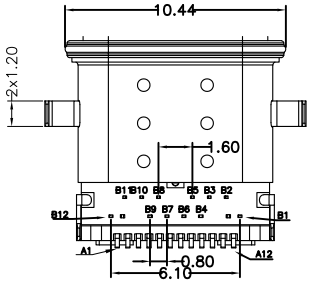

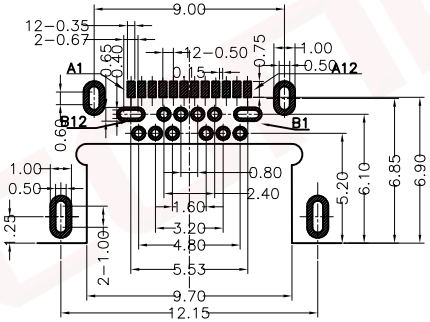

RECOMMEND PCB LAYOUT
TOL=±0.05

1.ELECTRICAL: SPECIFICATION:
1-1:CURUENT RATAING:
VBUS AND GND CONTACTS RATED AT 1.25A
PARALLELED FOR A TOTAL OF 5A;
1-2:INITIAL CONTACT RESISTANCE :40 MEGOHMS
1-3:DIELECTRIC WITHSTANDING VOLTAGE:
100V AC MIN;
2:MECHANICAL CHARACTERISTICS:
2-1:MATING FORCE:5~20N
2-2:UNMATING FORCE:8~20N(INITIAL),
6~20N(AFTER 10000 CYCLES)
2-3:FREQUENCE: 200±50 CYCLES /HOUR,10000 CYCLES
2-4:OPERATING TEMPERATURE ;-40°~80°.
3: WATERPROOF: IP-X7.
4.Product number code:

DS1144-60 - X X X X X X X

- Packing Type
  R: Tape On Reel
- Shell Plating
  N: Full Nickel
- Housing color
  B: Black
- Contact Plating
  4:Selective 3u" gold
  0:Selective gold flash
- Mounting type
  S: SMT type
- Connector type
  F: Female
- No. of contacts
  24: 24pin

TABLE A

NO.	DESCRIPTION	MATERIAL	FINISH PLANTED	QTY	REMARKS
7	RING	SILICON	---	1PCS	
6	MID-PLANT	STAINLESS STEEL	---	1PCS	
5	GND-PLANT	STAINLESS STEEL	NI/SN Plated	1PCS	
4	SHELL	STAINLESS STEEL	---	1PCS	
3	INNER SHELL	STAINLESS STEEL	NI Plated	1PCS	
2	CONTACT	COPPER ALLOY	Au/NI Plated	2SET	
1	HOUSING	HIGH TEMPERATURE PLASTIC	BLACK	1PCS	

TABLE B

PIN	SIGNAL NAME	PIN	SIGNAL NAME
A1	GND	B12	GND
A2	SSTXP1	B11	SSRXP1
A3	SSTXN1	B10	SSRXN1
A4	VBUS	B9	VBUS
A5	CC1	B8	SBU2
A6	DP1	B7	DN2
A7	DN1	B6	DP2
A8	SBU1	B5	CC2
A9	VBUS	B4	VBUS
A10	SSRXN2	B3	SSTXN2
A11	SSRXP2	B2	SSTXP2
A12	GND	B1	GND

(Series Image-Reference Only)

GENERAL TOLERANCE		ANGLE TOLERANCE	
X.	±0.60	X.	±5°
.X	±0.38	.X	±3°
.XX	±0.25	.XX	±2°

DRAWING TYPE	CUSTOMER		
SCALE	1:1	SHEET	1 OF 1
DRAWING NO.	C-DS1144-60-XXXXXX-A		

PROJECTION		TITLE	USB C Type 24P Female SMT Type L=9.85mm Centre-H=0.65mm Waterproof Grade IP-X7
UNITS	mm		
SHEET SIZE	A4	SERIES	DS1144-60 SERIES

晨翔电子有限公司
CONNFLY ELECTRONIC CO. LTD

The information provided herein is from CONNFLY Electronic Co., Ltd. and is confidential. Any disclosure to a party other than the recipient is prohibited. The intellectual properties and its rights contained herein, including but not limited to, trademarks, patents, copyrights, trade secrets, and technical know-how, are owned exclusively by CONNFLY or its affiliates. Unauthorized use or modification is strictly prohibited without prior written consent from CONNFLY. All intellectual properties provided herein are for reference purposes only and does not constitute authorization of its use in any format or manner. CONNFLY may enforce its intellectual property rights at its own discretion; failures or delays to exercise such rights does not constitute a waiver of such rights.