Dept / Qty	
DC	1
ED	1
IE	1
ISO	1
PD	1
R&D	1
SD	1
QA	1
QC	1
QE	1

REV.	DESCRIPTION	DRAWN	CHECKED	APPROVED
A	NEW RELEASE	JLZ 11/13/13'		
B	DRAWING UPDATE	JLZ 09/23/25'		

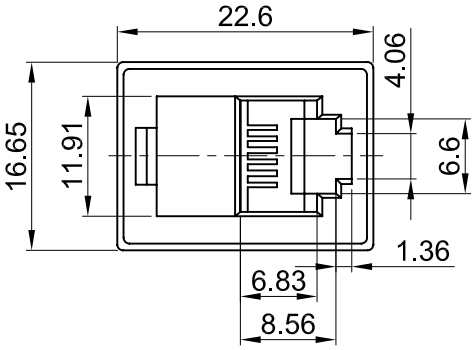

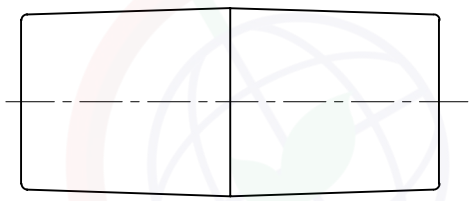

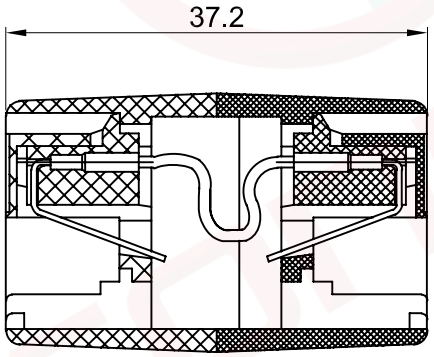

Notes:

1. Electrical Characteristics:
   - 1.1 Contact Resistance: 100mΩ Max.
   - 1.2 Dielectric Withstanding Voltage: 500V AC(rms) For 1 Minute.
   - 1.3 Insulation Resistance: 1000MΩ Min.
   - 1.4 Current Rating:0.5A.
   - 1.5 Voltage Rating:125V AC rms.
2. Environment Characteristics:
   - 2.1 Temperature: -40°C~+85°C.
3. Materials:
   - 3.1 Contact Material: Copper Alloy.
   - 3.2 Contact Plating: Gold Plating Over Nickel.
   - 3.3 Insulator Materials: ABS,Black or Ivory.
4. Product Number Code:

DS1133-06 - X X X X X

- Housing Material
  A:ABS
- Housing Color
  B:Black
  V:Ivory
- Contact Plating
  8:Gold Flash
  C:3u"Au .....
- No.Of Contacts
  6:6P6C 4:6P4C
- Connector Type
  S:Socket

(Series Image-Reference Only)

GENERAL TOLERANCE		ANGLE TOLERANCE	
X.	±0.60	X.	±5°
.X	±0.38	.X	±3°
.XX	±0.25	.XX	±2°

DRAWING TYPE	CUSTOMER		
SCALE	1:1	SHEET	1 OF 1
DRAWING NO.	C-DS1133-06-XXXXX-B		

PROJECTION		TITLE	PCB JACK 6P Adaptor
UNITS	mm		
SHEET SIZE	A4	SERIES	DS1133-06 SERIES

晨翔电子有限公司
CONNFLY CONNFLY ELECTRONIC CO. LTD

The information provided herein is from CONNFLY Electronic Co., Ltd. and is confidential. Any disclosure to a party other than the recipient is prohibited. The intellectual properties and its rights contained herein, including but not limited to, trademarks, patents, copyrights, trade secrets, and technical know-how, are owned exclusively by CONNFLY or its affiliates. Unauthorized use or modification is strictly prohibited without prior written consent from CONNFLY. All intellectual properties provided herein are for reference purposes only and does not constitute authorization of its use in any format or manner. CONNFLY may enforce its intellectual property rights at its own discretion; failures or delays to exercise such rights does not constitute a waiver of such rights.