Dept / Qty	
DC	1
ED	1
IE	1
ISO	1
PD	1
R&D	1
SD	1
QA	1
QC	1
QE	1

REV.	DESCRIPTION	DRAWN	CHECKED	APPROVED
A	NEW RELEASE	YCH 08/23/07'		
B	DRAWING UPDATE	JLZ 10/31/19'		
C	DRAWING UPDATE	JLZ 07/17/26'		

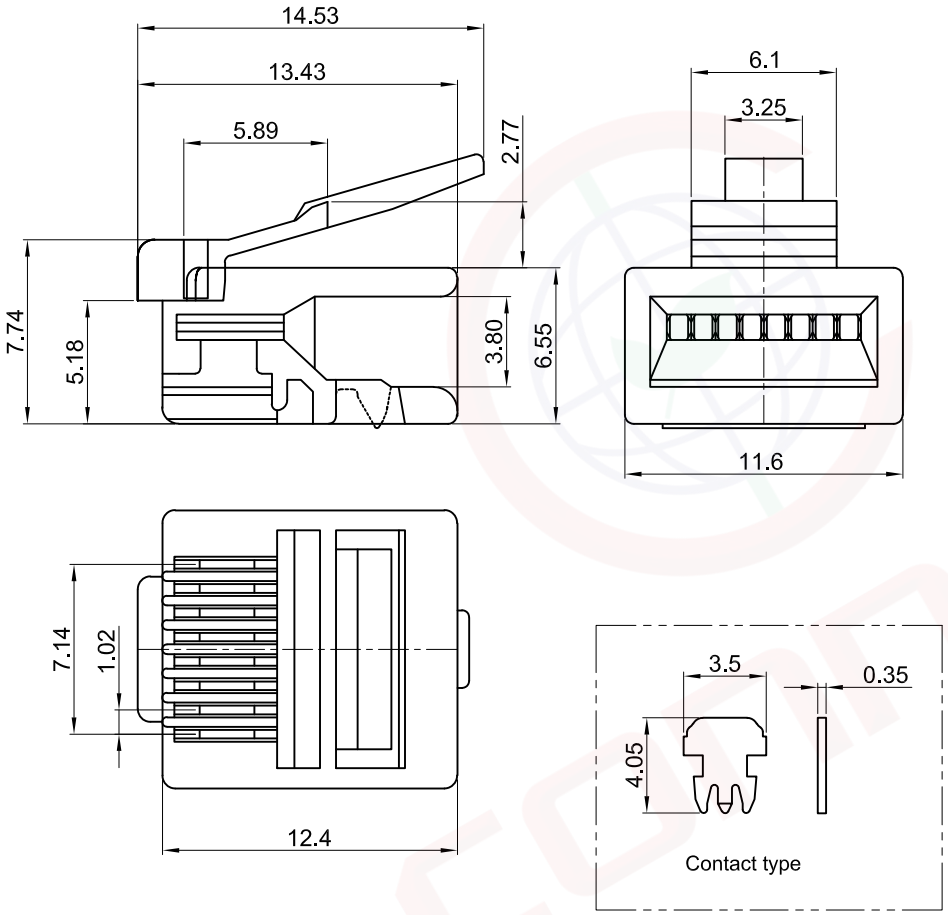

Notes:

Specifications:

1. Contact Resistance: 20mΩ Max.
2. Insulation Resistance: 500MΩ Min.
3. Dielectric Withstanding Voltage: 1000V AC(rms) For 1 Minute.
4. Current Rating:1.5A.
5. Voltage Rating:150V.
5. Temperature: -40°C~+85°C.

Materials:

1. Contact Material: Copper Alloy.
2. Contact Plating: Gold Plating Over Nickel.
3. Insulator Material: PC,Transparent.

Product Number Code:

DS1123-02 - X X X X - X

- UL Level
  N/A Code:UL94 V-2
  0:UL94 V-0
- Housing Color
  T:Transparent
- Contact Plating
  0:Gold Flash 15:15u"Au
  3:3u"Au 30:30u"Au
  6:6u"Au 50:50u"Au
- No.Of Contacts
  8:8p8c
- Connector Type
  P:Plug

GENERAL TOLERANCE		ANGLE TOLERANCE	
X.	±0.60	X.	±5°
.X	±0.38	.X	±3°
.XX	±0.25	.XX	±2°

DRAWING TYPE	CUSTOMER		
SCALE	1:1	SHEET	1 OF 1
DRAWING NO.	C-DS1123-02-XXXXX-X-C		

PROJECTION		TITLE	Plug 8P8C Square & Short Type
UNITS	mm		
SHEET SIZE	A4	SERIES	DS1123-02 SERIES

晨翔电子有限公司

CONNFLY CONNFLY ELECTRONIC CO. LTD

The information provided herein is from CONNFLY Electronic Co., Ltd. and is confidential. Any disclosure to a party other than the recipient is prohibited. The intellectual properties and its rights contained herein, including but not limited to, trademarks, patents, copyrights, trade secrets, and technical know-how, are owned exclusively by CONNFLY or its affiliates. Unauthorized use or modification is strictly prohibited without prior written consent from CONNFLY. All intellectual properties provided herein are for reference purposes only and does not constitute authorization of its use in any format or manner. CONNFLY may enforce its intellectual property rights at its own discretion; failures or delays to exercise such rights does not constitute a waiver of such rights.