Dept / Qty	
DC	1
ED	1
IE	1
ISO	1
PD	1
R&D	1
SD	1
QA	1
QC	1
QE	1

REV.	DESCRIPTION	DRAWN	CHECKED	APPROVED
A	NEW RELEASE	Andy_H 12/1/17'		
B	DRAWING UPDATE	JLZ 12/04/24'		

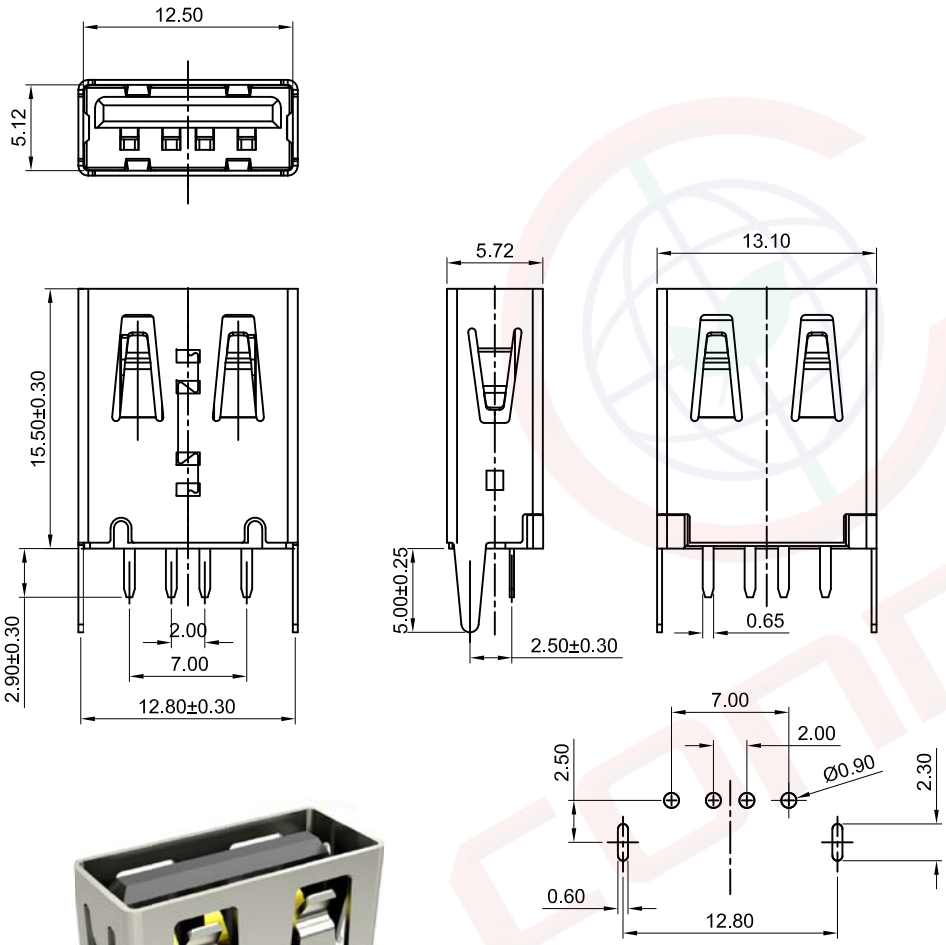

Recommend PCB layout
(Tolerance:±0.05)

(Series Image-Reference Only)

NOTES:

1. SPECIFICATIONS:
   - 1.0 CONTACT RESISTANCE: 30mΩ max.
   - 1.1 INSULATOR RESISTANCE: 1000MΩ min.AT DC 500V.
   - 1.2 CURRENT RATING: 1.5A.
   - 1.3 VOLTAGE RATING: 30V AC/DC.
   - 1.4 DIELECTRIC STRENGTH: AC 500V FOR 1 Minute.
   - 1.5 TEMPERATURE RANGE: -40°C ~ +105°C .
2. MATERIALS:
   - 2.0 HOUSING: THERMOPLASTIC(UL94 V-0).
   - 2.1 CONTACT: COPPER ALLOY
   - 2.2 SHELL: COPPER ALLOY.
3. PRODUCT NUMBER CODE:

DS1095-16 - X X X X

- Contact plating
  - 0: Selective gold flash
  - 03: Selective gold 3u"
  - 30: Selective gold 30u"
- Mounting type
  - S: Straight type
- Shell plating
  - N: Nickel
- Color of housing
  - B: Black
  - W: White

GENERAL TOLERANCE		ANGLE TOLERANCE	
X.	±0.60	X.	±5°
.X	±0.38	.X	±3°
.XX	±0.25	.XX	±2°

DRAWING TYPE	CUSTOMER		
SCALE	1:1	SHEET	1 OF 1
DRAWING NO.	C-DS1095-16-XXXX-B		

PROJECTION		TITLE	USB A Female V/T Type H=15.5mm W/O Flange Type
UNITS	mm		
SHEET SIZE	A4	SERIES	DS1095-16 SERIES

晨翔电子有限公司
CONNFLY ELECTRONIC CO. LTD

The information provided herein is from CONNFLY Electronic Co., Ltd. and is confidential. Any disclosure to a party other than the recipient is prohibited. The intellectual properties and its rights contained herein, including but not limited to, trademarks, patents, copyrights, trade secrets, and technical know-how, are owned exclusively by CONNFLY or its affiliates. Unauthorized use or modification is strictly prohibited without prior written consent from CONNFLY. All intellectual properties provided herein are for reference purposes only and does not constitute authorization of its use in any format or manner. CONNFLY may enforce its intellectual property rights at its own discretion; failures or delays to exercise such rights does not constitute a waiver of such rights.