Dept / Qty	
DC	1
ED	1
IE	1
ISO	1
PD	1
R&D	1
SD	1
QA	1
QC	1
QE	1

REV.	DESCRIPTION	DRAWN	CHECKED	APPROVED
A	NEW RELEASE	LJH 06/22/05'		LJC 06/22/05'
E	DRAWING UPDATE	JLZ 08/18/20'		

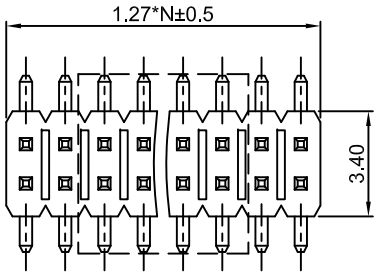

N=Nubmer of contacts/2

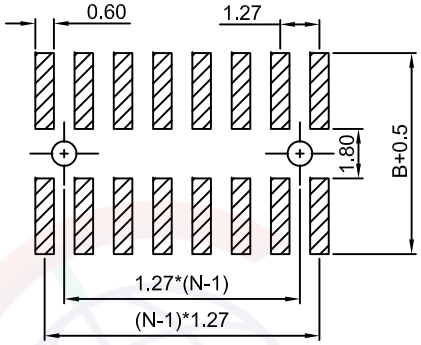

Recommend PCB layout
(Tolerance:±0.05)

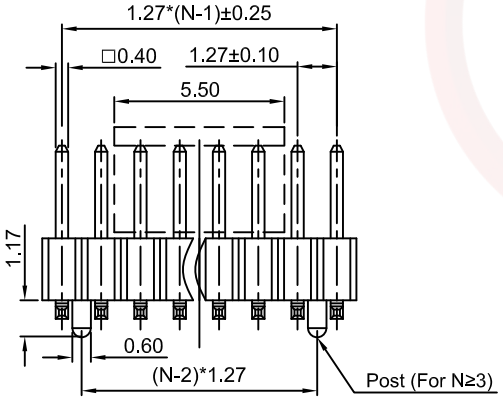

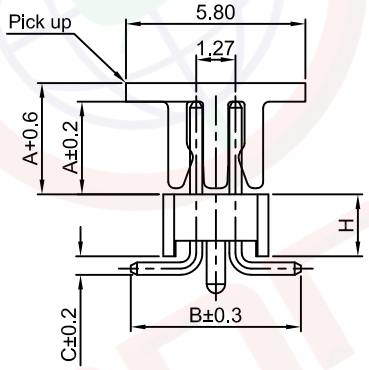

Type	DIM A	DIM B	DIM C
1	3.00	5.50	0.60
2	3.70	5.70	0.60

Notes:

Specifications:
1. Contact Resistance: 20mΩ Max.
2. Insulation Resistance: 500MΩ Min.
3. Dielectric Withstanding Voltage: 300V AC(rms) For 1 Minute.
4. Current Rating:1A.
5. Temperature: -40°C~+105°C.

Materials:
1. Contact Material: Copper Alloy.
2. Contact Plating: Gold Plating Over Nickel.
3. Insulator Material: PA-9T,Black,UL94-V0.

Product Number Code:

DS1031-09 - X X X X X X X X - X

- Plating level
  3A: Level 3A
- Packing type
  B:Tube
  R:Tape on reel
  T:Tray
- Pick up support
  S: W/ pick up
  X: W/O pick up
- DIM.A B C type
  1: Type 1 .....
  or A*.*-B*.*-C*.*
- Housing Dim.(DIM.H)
  1: H=1.00mm 2: H=1.50mm
  3: H=1.70mm 4: H=2.00mm
  5: H=2.50mm
- Mounting type
  S: SMT type
- Housing color
  B:Black
- Contact plating
  8: Full gold flash
- Connector type
  P:Plug
- No.of contacts
  2x3-2x40

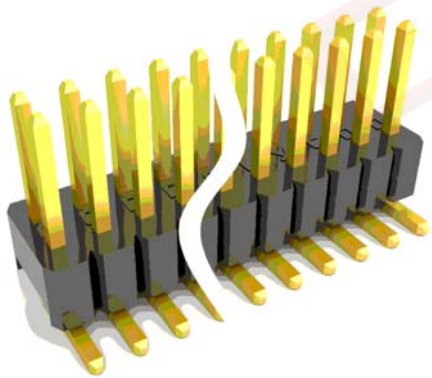

(Series Image-Reference Only)

GENERAL TOLERANCE		ANGLE TOLERANCE	
X.	±0.60	X.	±5°
.X	±0.38	.X	±3°
.XX	±0.25	.XX	±2°

DRAWING TYPE	CUSTOMER		
SCALE	1:1	SHEET	1 OF 1
DRAWING NO.	C-DS1031-09-XXXXXXXX-3A-E		

PROJECTION		TITLE	1.27mm Pin Header SMT With Post Type
UNITS	mm		
SHEET SIZE	A4	SERIES	DS1031-09 SERIES

晨翔电子有限公司
CONNFLY CONNFLY ELECTRONIC CO. LTD

The information provided herein is from CONNFLY Electronic Co., Ltd. and is confidential. Any disclosure to a party other than the recipient is prohibited. The intellectual properties and its rights contained herein, including but not limited to, trademarks, patents, copyrights, trade secrets, and technical know-how, are owned exclusively by CONNFLY or its affiliates. Unauthorized use or modification is strictly prohibited without prior written consent from CONNFLY. All intellectual properties provided herein are for reference purposes only and does not constitute authorization of its use in any format or manner. CONNFLY may enforce its intellectual property rights at its own discretion; failures or delays to exercise such rights does not constitute a waiver of such rights.